KYEC®

C Track

Flat Cable Power Supply System

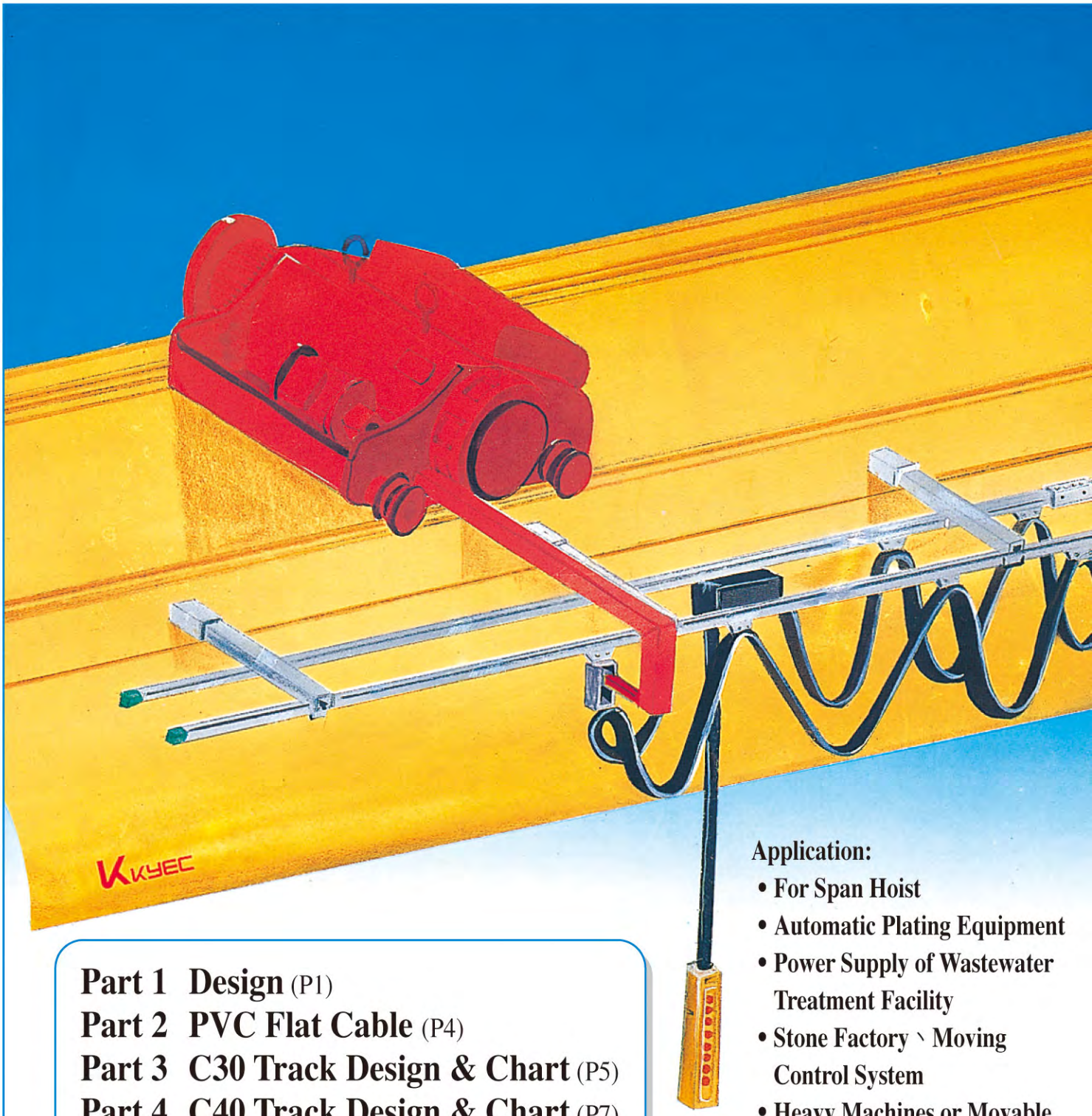

Part 1 Design (P1)
Part 2 PVC Flat Cable (P4)
Part 3 C30 Track Design & Chart (P5)
Part 4 C40 Track Design & Chart (P7)
Part 5 Aluminum Track Design & Chart (P8)
Part 6 Installments (P10)
Part 7 Diamond Track (P11)

Application:

- For Span Hoist
- Automatic Plating Equipment
- Power Supply of Wastewater Treatment Facility
- Stone Factory、Moving Control System
- Heavy Machines or Movable Power Supply

Part 1 Design

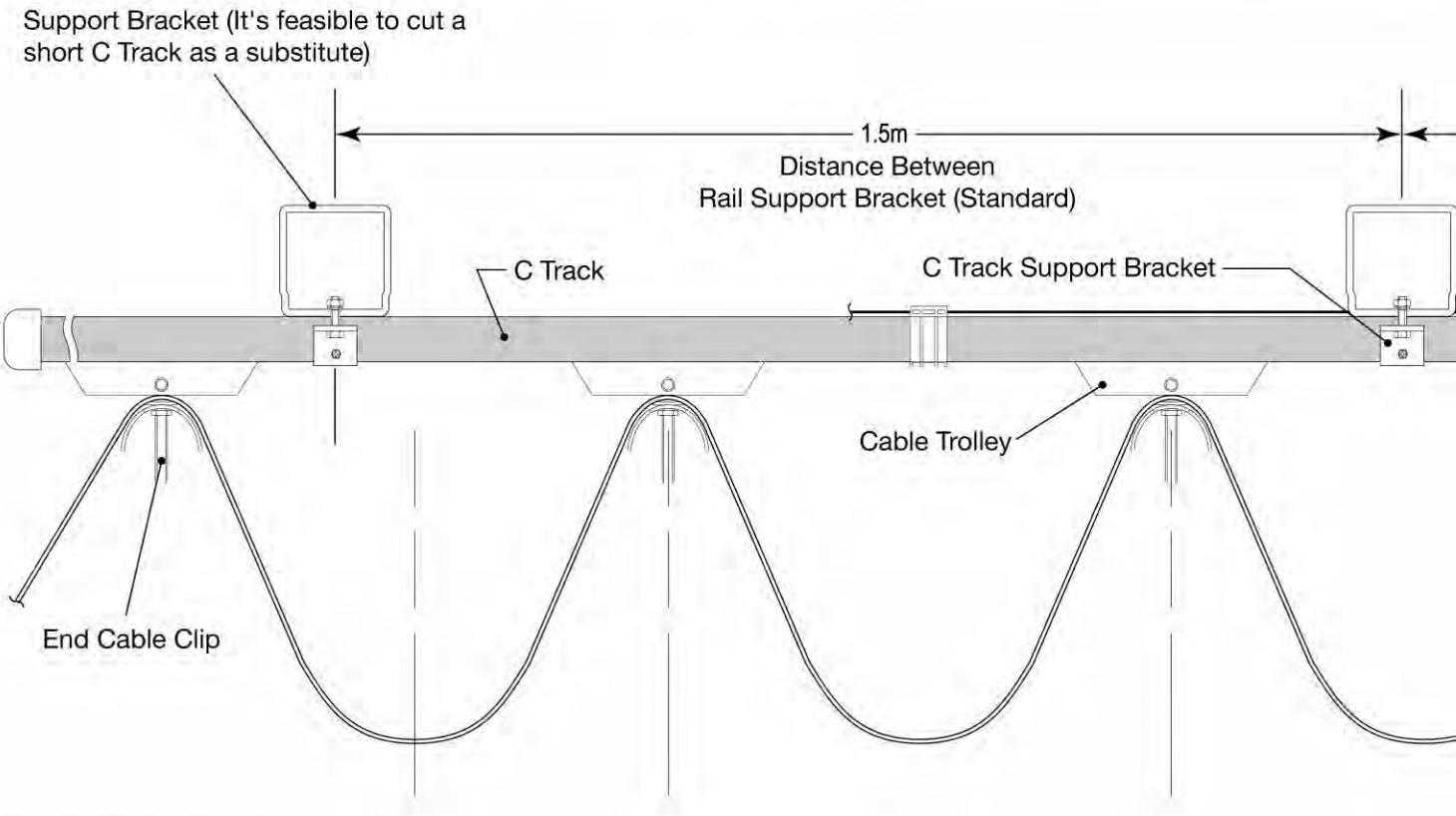

1. Structure Data

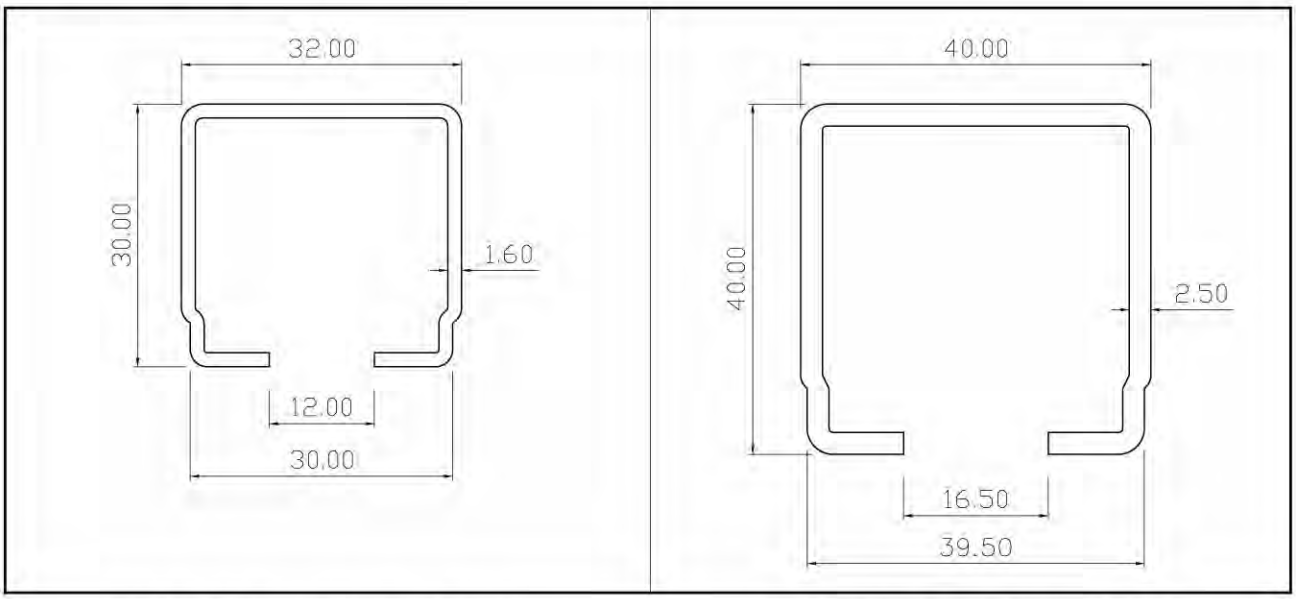

C30 C-rail Cross Section Chart

C40 C-rail Cross Section Chart

Type	Material	Length (mm)	Length Tolerance (mm)	Thickness (mm)	Physics Characteristic			Weight (kg/m)
					Ix (cm^4)	Wx (cm^3)	e (mm)	
KYEC-BC3030	Galvanized Steel	3000	± 4	1.6	1.97	1.23	16.0	1.24 kg/m
KYEC-BC4030	Galvanized Steel	3000	± 4	2.5	6.74	3.08	21.6	2.5 kg/m

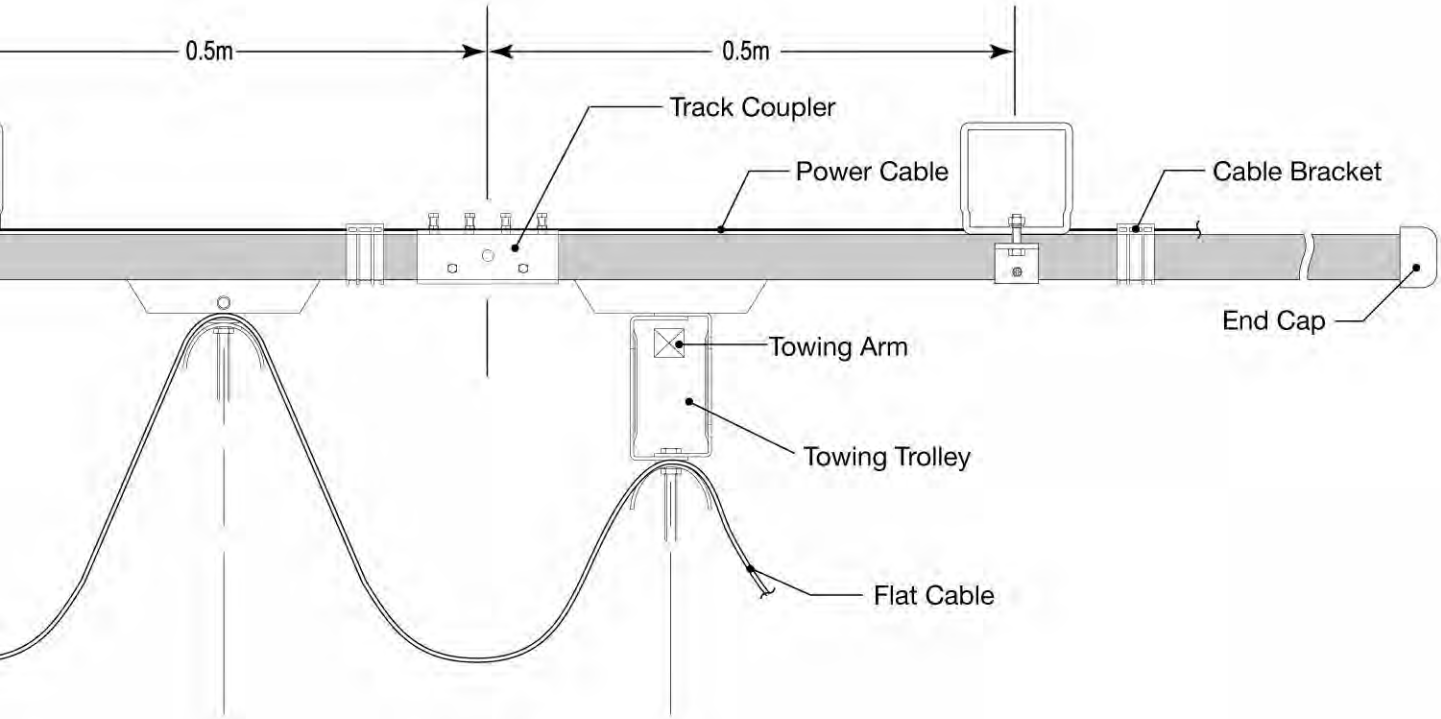

2. Layout

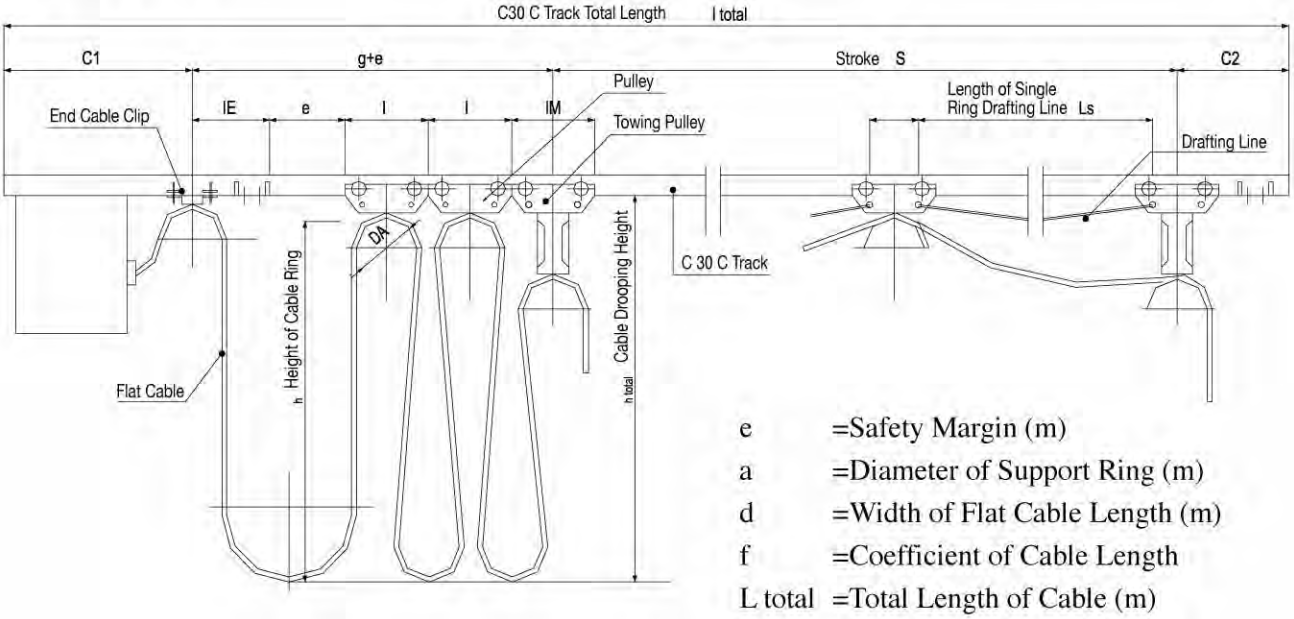

e =Safety Margin (m)
a =Diameter of Support Ring (m)
d =Width of Flat Cable Length (m)
f =Coefficient of Cable Length
L total =Total Length of Cable (m)
L loop =Length of Single Ring Cable (m)
Ls =Length of the Single Ring Drafting Line (m)

I total = Total Length of C30 or C40 Track
s =L Stroke (m)
h = Height of Cable Ring (m)
h Total = Cable Drooping Height (m)
n =Quantity of Cable Ring
g =Length Needed of Pulley and Its Accessories (m)
l =Length of Pulley (m)

$$n=f\times\frac{s+g}{2h} \qquad h=f\times\frac{s+g}{2n}$$

f=1.1 (Sliding Speed 50m/min)

3. C30、C40 Track Design Information

1. C30 Track Known Data

P =4 Single Trolley Capacity (kg)

Iw =85 Length of Trolley (mm)

Z =11 Quantity of Trolley (set) Calculated: L=Z×Iw/1000=0.93(M)

☆☆ Cross-refer the chart,

Ia =1.3 C30 support clamp distance.

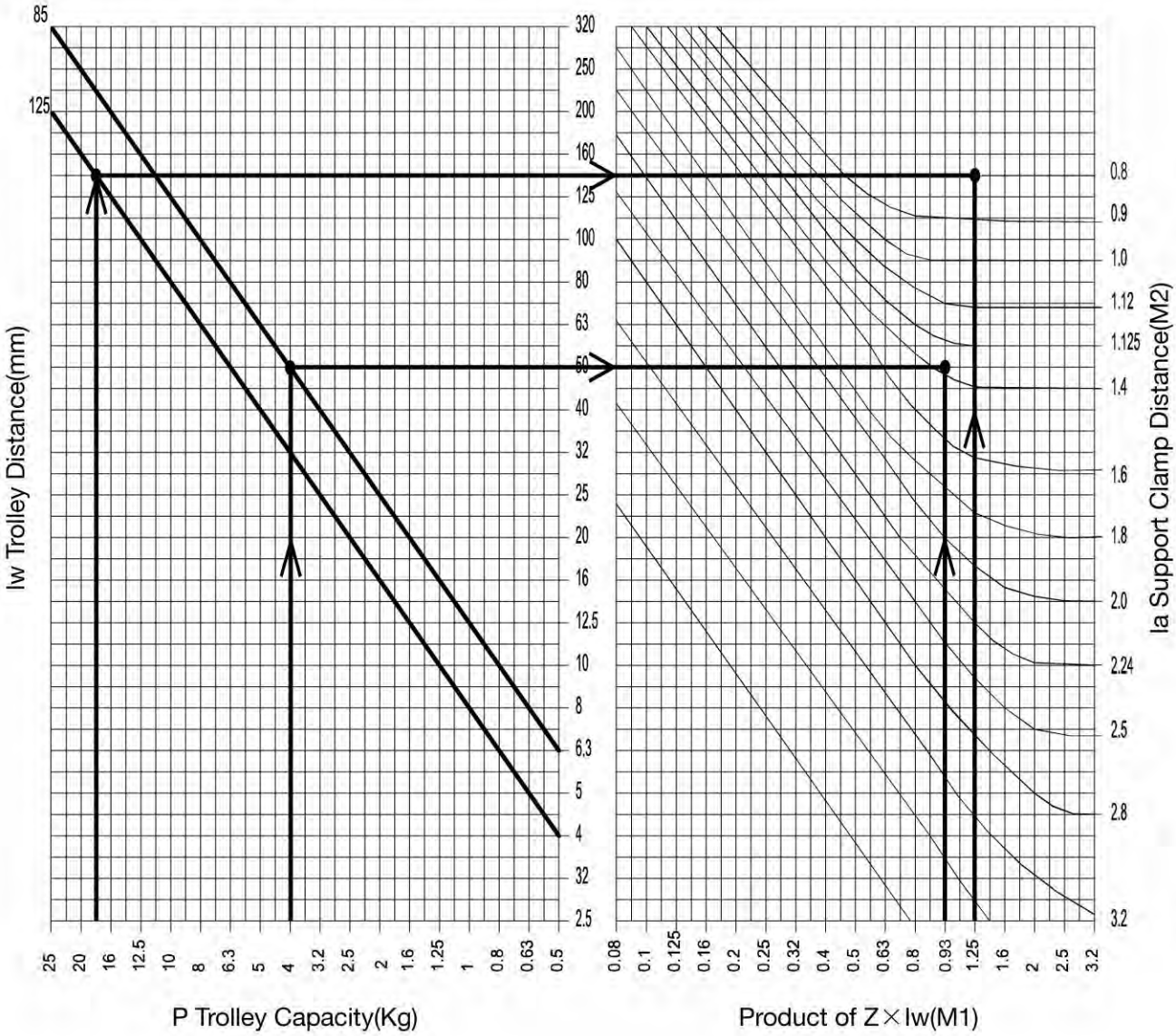

2. C40 Rail Known Data

P =18 Single Trolley Capacity(kg)

Iw =125 Length of Trolley(mm)

Z =10 Quantity of Trolley(set) Calculated: L =Z×Iw/1000=1.25(M)

☆☆ Cross-refer the chart, =10×125/1000=1.25 (M)

Ia =0.8 C40 support clamp distance.

Part 2 PVC Flat Cable

DESCRIPTION:

- Bare Stranded copper conductor.
- PVC insulation, Rated temp 60℃, 80℃ or 1105% available.
- PVC jacket, Acid resistence available or UL Type

Conductor		No. of Core	Insulation Thickness	Insulation Diameter	Overall Diameter	Character			Remark
Cross Section MM^2	No. / Dim (mm)		mm	No. / mm	mm	20℃(Ω/KM)	V/MIN	M /KM	
0.75	30/0.18	24	0.6	2.3	8.3×40.3	25.8	1500	50	
0.75	30/0.18	36	0.6	2.3	11×51	25.8	1500	50	
0.75	30/0.18	60	0.43	2.0	11.6×74	25.8	1500	50	
1.25	50/0.18	3	0.8	3.0	5.0×11.2	16	1500	50	
1.25	50/0.18	4	0.8	3.0	5.8×15.7	16	1500	50	
1.25	50/0.18	5	0.8	3.0	6.1×18.8	16	1500	50	
1.25	50/0.18	8	0.8	3.0	5.0×28.7	16	1500	50	
1.25	50/0.18	10	0.8	3.0	5.1×34.6	16	1500	50	
1.25	50/0.18	13	0.8	3.0	5.2×43	16	1500	50	
2.0	37/0.26	3	0.8	3.2	5.0×11.4	10.2	1500	50	
2.0	37/0.26	4	0.8	3.2	6.8×18.6	10.2	1500	50	
2.0	37/0.26	8	0.8	3.2	6.0×29.5	10.2	1500	50	
3.5	140/0.18	3	0.8	4.2	6.3×16.2	5.54	1500	50	
3.5	140/0.18	4	0.8	4.2	7.5×19.5	5.54	1500	40	
3.5	140/0.18	8	0.8	4.2	6.8×39	5.54	1500	40	
5.5	217/0.18	3	1.0	5.2	7.5×20	3.56	1500	40	
5.5	217/0.18	4	1.0	5.2	8.0×23	3.56	1500	40	
8	315/0.18	3	1.0	6.2	9.0×21.6	2.54	1500	40	
8	315/0.18	4	1.0	6.2	10×30	2.45	1500	40	
14	550/0.18	3	1.0	7.6	12×28.8	1.43	1500	40	
14	550/0.18	4	1.0	7.6	10.6×33	1.46	1500	40	
22	855/0.18	3	1.2	10.0	15×35	0.919	1500	40	
22	855/0.18	4	1.2	10.2	13×47	0.919	1500	40	
38	1480/0.18	3	1.2	12.5	17.8×42.5	0.75	1500	40	
38	1480/0.18	4	1.2	12.5	20×53	0.75	1500	40	

Part 3 C30 Track & Parts Charts

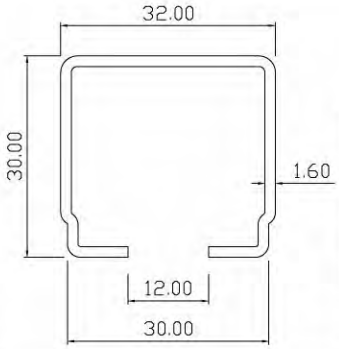

KY-BC3030
C30 C Track 3M/pic
KY-BCS3030 SUS 304

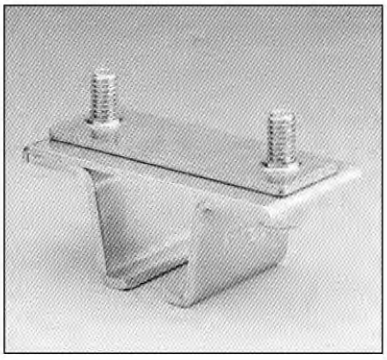

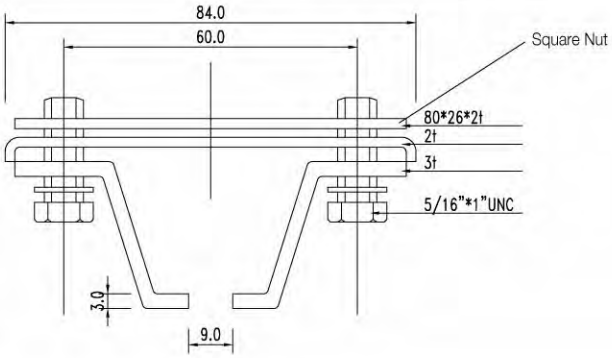

KY-BC3100
C30 C Track Support Bracket
KY-BCS3100 SUS 304

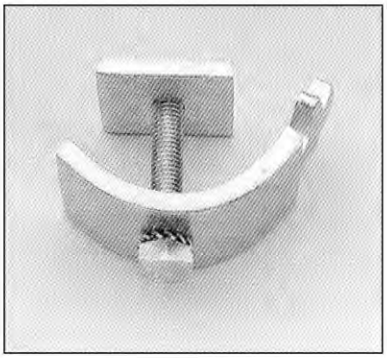

KY-BC3103
C Track Clip

KY-BC3102
C30 Support Arm

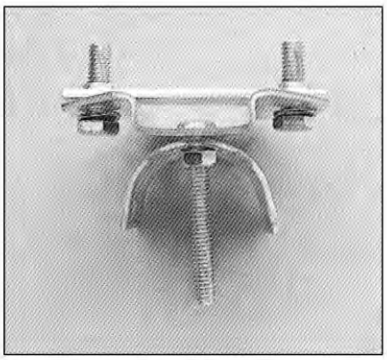

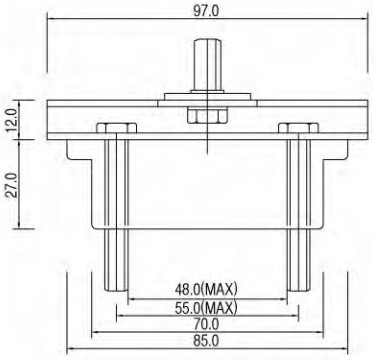

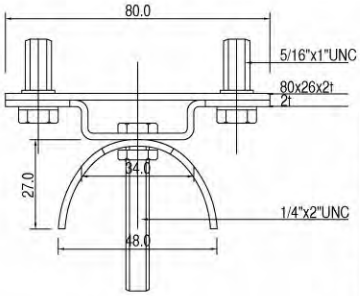

KY-BC3200
C30 End Cable Clip
KY-BCS3200 SUS 304

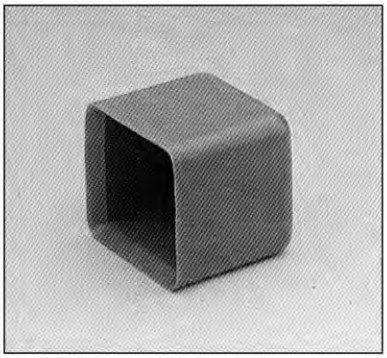

KY-BC3201
C30 End Cap

KY-BC3202
C30 Cable Bracket

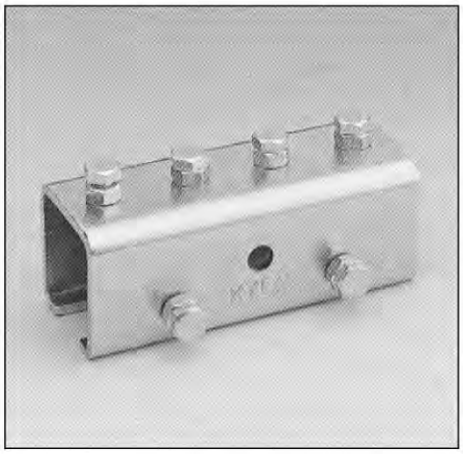

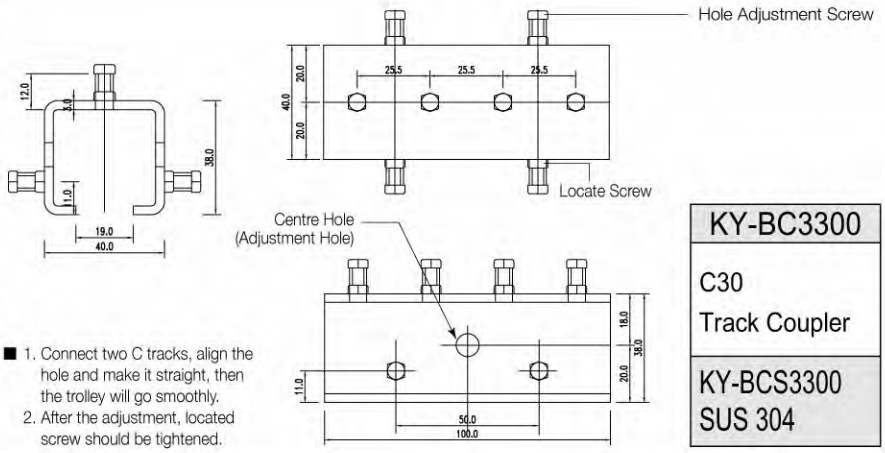

■ 1. Connect two C tracks, align the hole and make it straight, then the trolley will go smoothly.
2. After the adjustment, located screw should be tightened.

KY-BC3300
C30 Track Coupler
KY-BCS3300 SUS 304

KY-BC3412A
Cable Connected Trolley

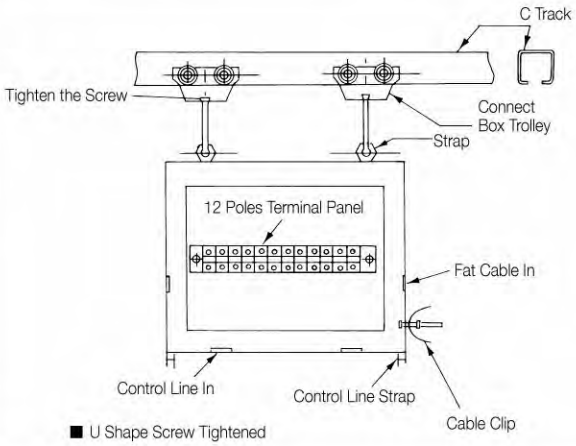

■ U Shape Screw Tightened

KY-BC3412
C30 C Connect Box.

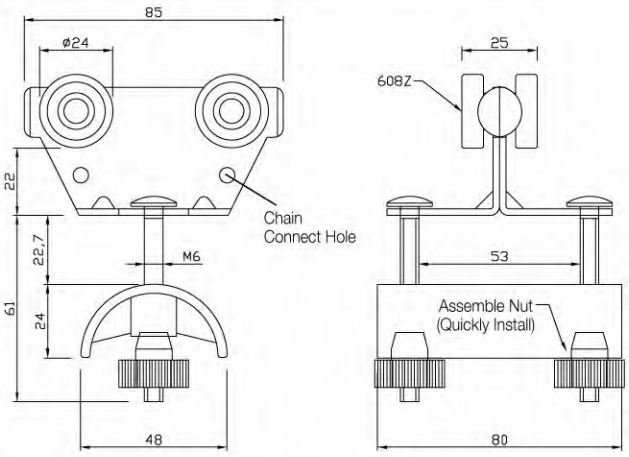

KY-BC3525
C30 Cable Trolley/Wide

KY-BC3525
C30 Cable Trolley
KY-BCS3525 SUS 304

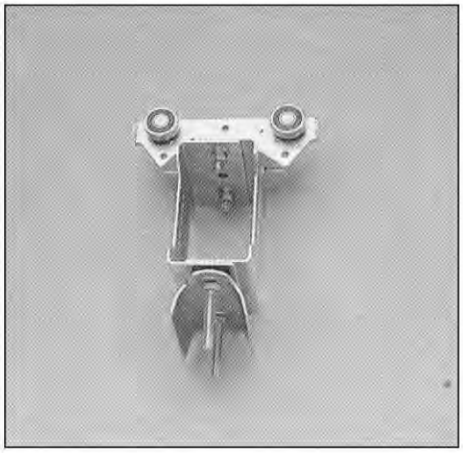

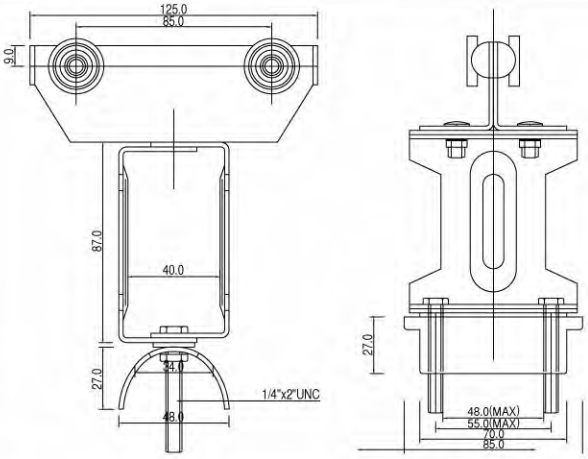

KY-BC3625
C30 Towing Trolley
KY-BCS3625 SUS 304

Part 4 C40 Track & Parts Charts

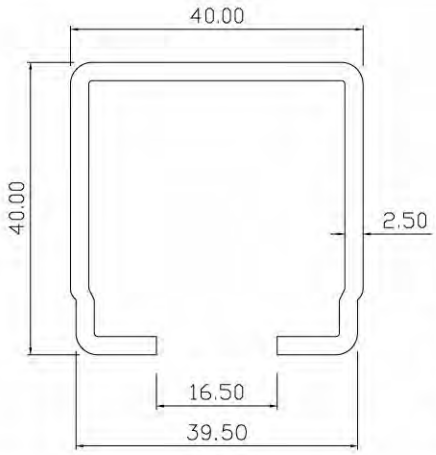

KY-BC4030
C40 C Track
KY-BCS4030 SUS 304

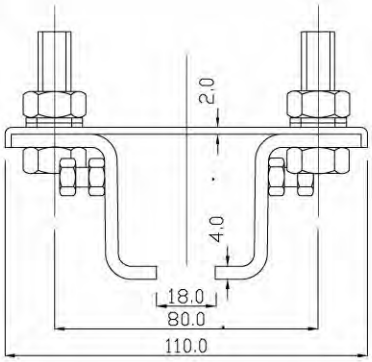

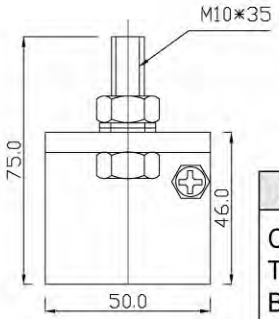

KY-BC4100
C30 Track Support Bracket
KY-BCS4100 SUS 304

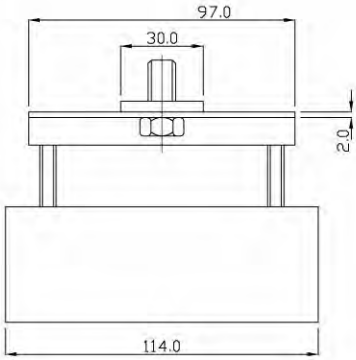

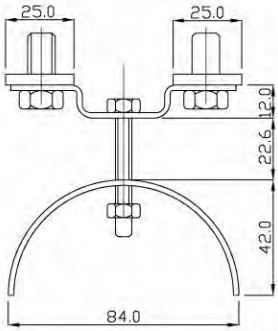

KY-BC4200
C40 End Cable Clip
KY-BCS4200 SUS 304

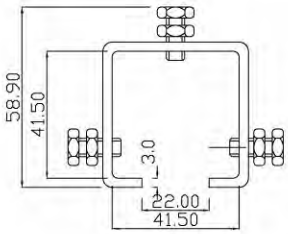

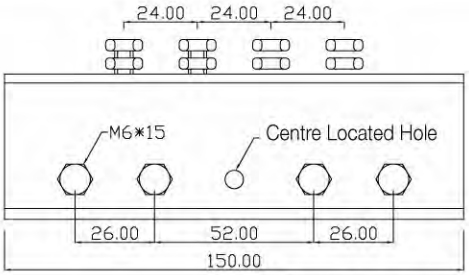

KY-BC4300
C40 Track Coupler
KY-BCS4300 SUS 304

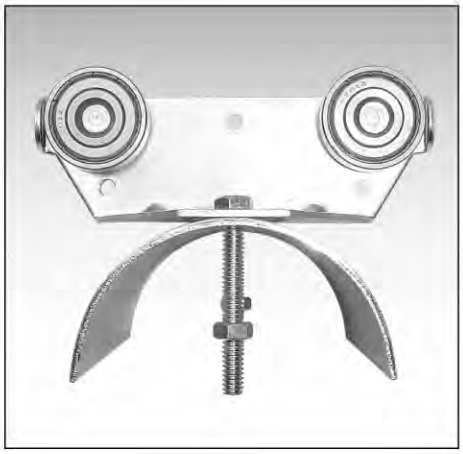

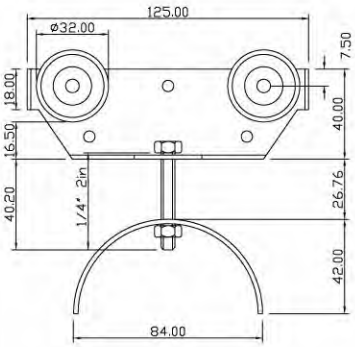

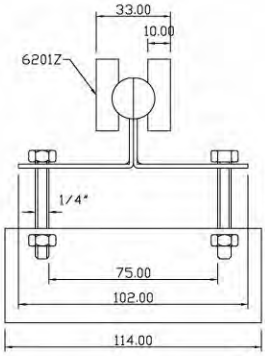

KY-BC4533
C40 Cable Trolley
KY-BCS4533 SUS 304

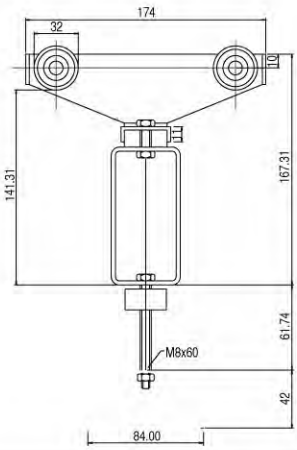

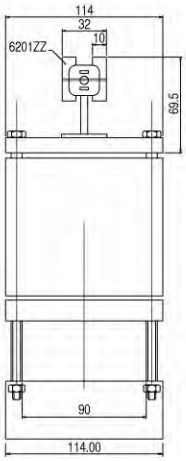

KY-BC4633
C40 Towing Trolley
KY-BCS4633 SUS 304

Part 5 Aluminum Track & Parts Charts

KY-BD3030
Al. Track

KY-BD3300
Coupler

KY-BD3100
Support Bracket

KY-BD3522
Cable Trolley

Wire Trolley

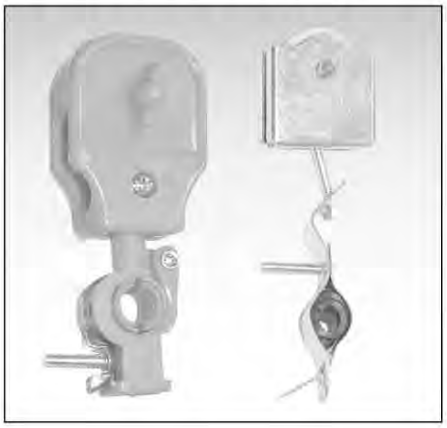

KY-OWS005
Steel Wire Trolley (Flat Cable Clip) (Wire Max Dim. 8mm)

KY-OWS107
Steel Wire Trolley (Wire Max Dim. 8mm)

KY-OWP206
Patent Trolley

I Steel Trolley

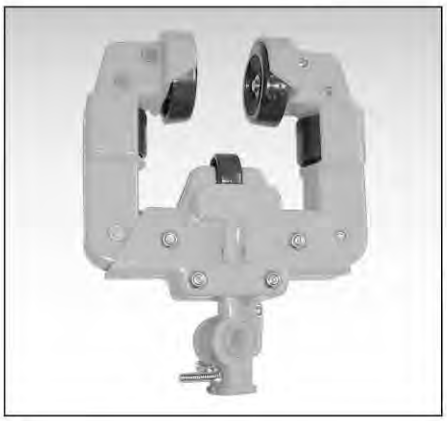

KY-OIW125150
W Type Trolley(L)

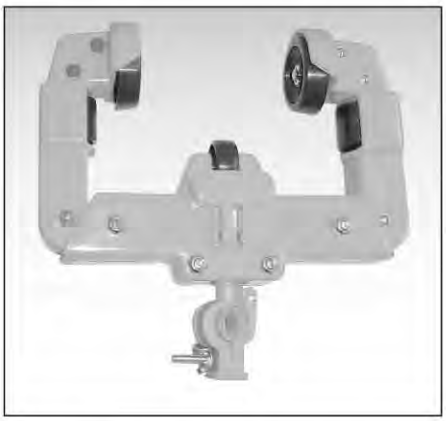

KY-OIW075100
W Type Trolley(S)

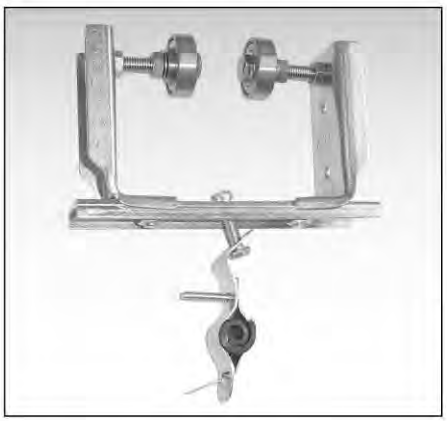

KY-OIU075125C
U Type Trolley (Swerve)

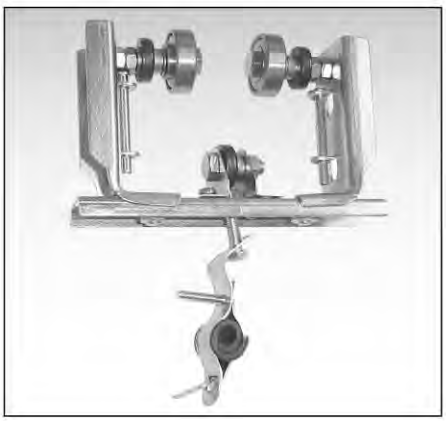

KY-OIU075150
U Type Trolley (Straight)

Produce On Demand

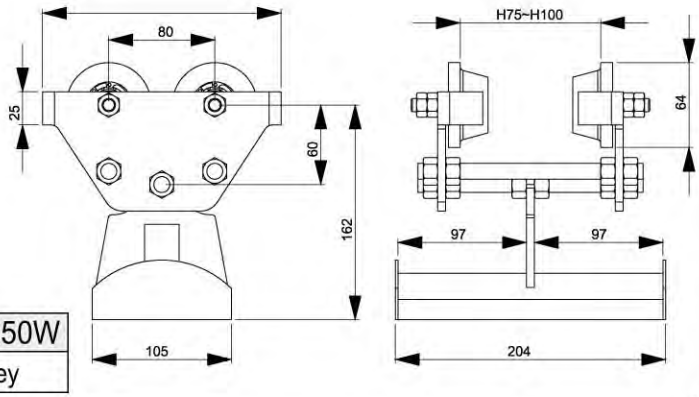

KY-OIH250W
H Trolley

Cable Clip

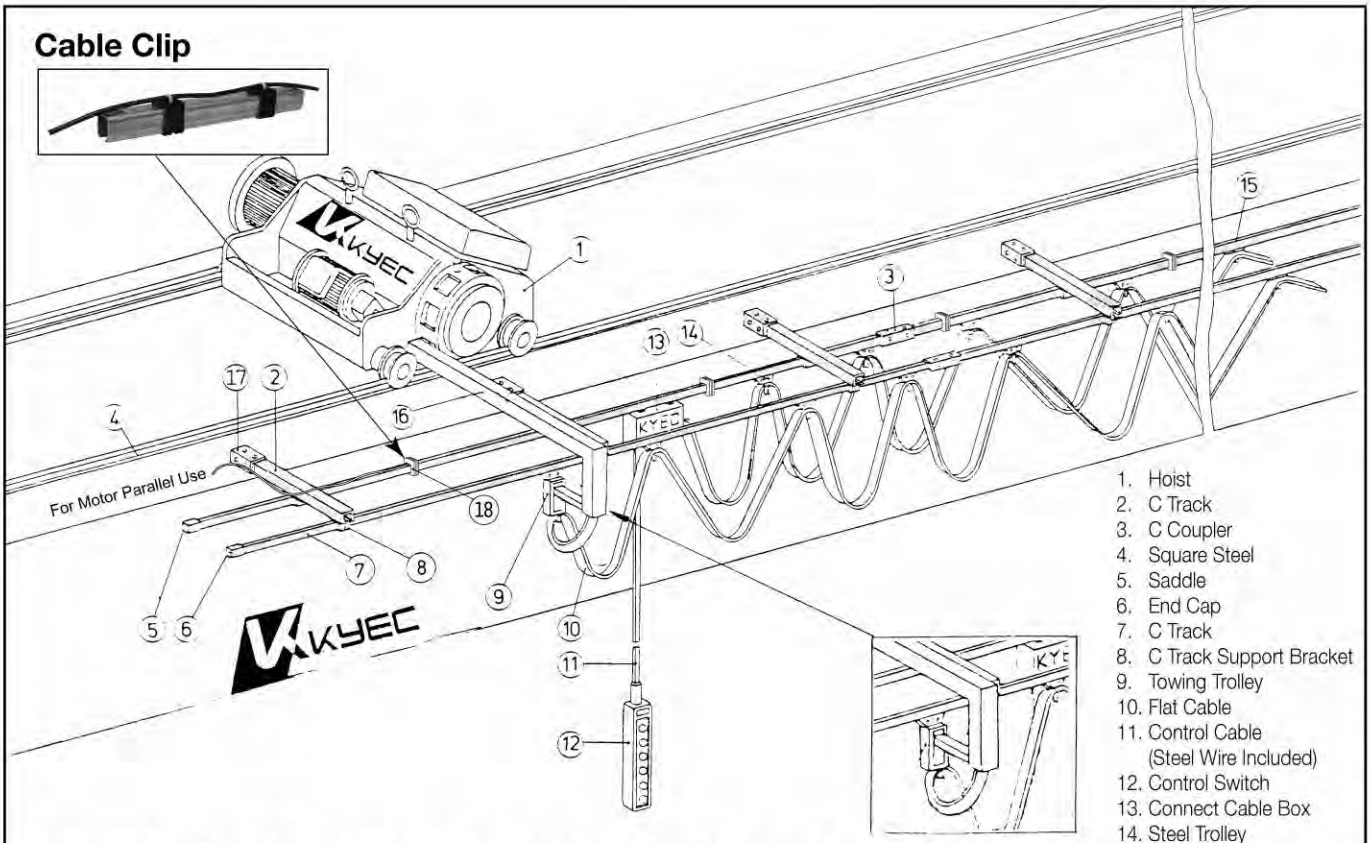

1. Hoist
2. C Track
3. C Coupler
4. Square Steel
5. Saddle
6. End Cap
7. C Track
8. C Track Support Bracket
9. Towing Trolley
10. Flat Cable
11. Control Cable (Steel Wire Included)
12. Control Switch
13. Connect Cable Box
14. Steel Trolley
15. End Cable Clip
16. Towing Stick
17. Connect Bracket
18. Motor Parallel (Cable Clip)

Dual Rail Hoist (C Track with Flat Cable Separate Control Chart)

Special Forte: Switch will avoid moving when hoist move.

Application: For long piece or big pail.

Mono Rail

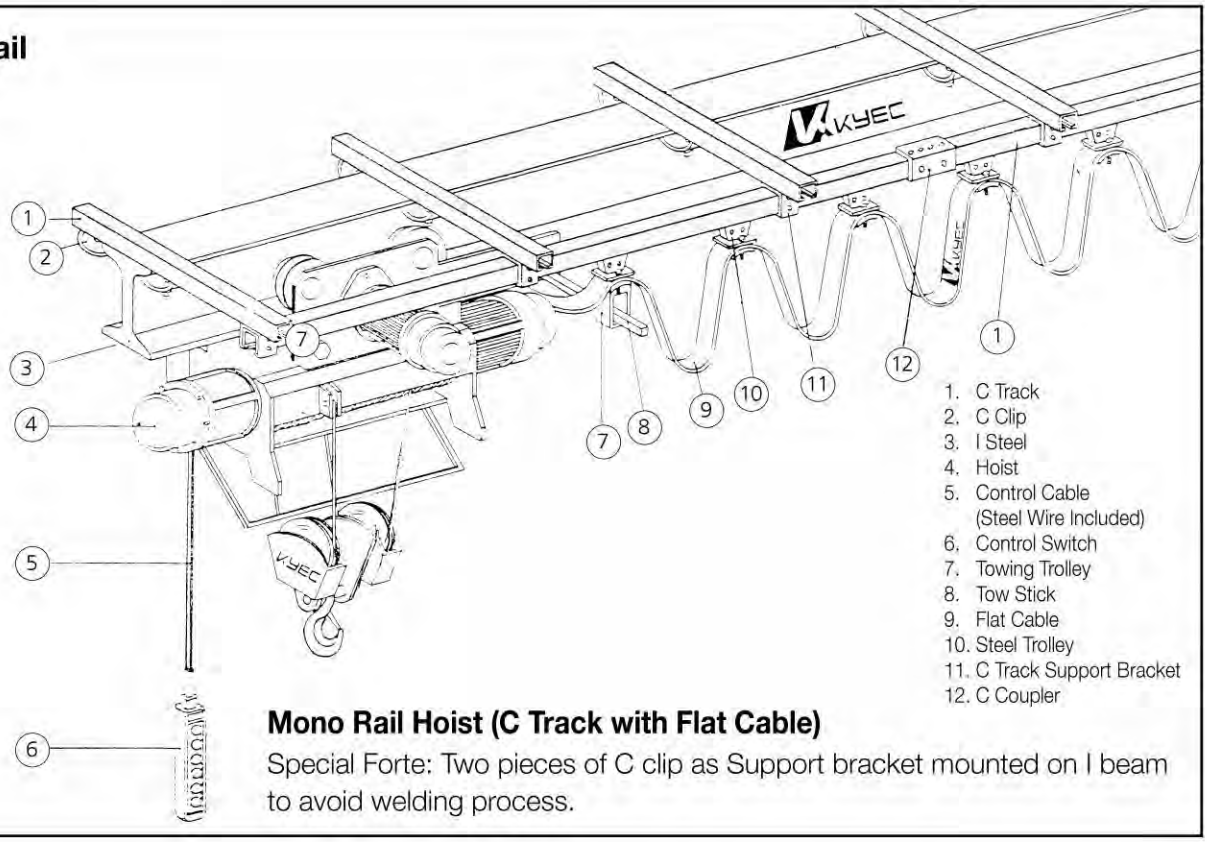

1. C Track
2. C Clip
3. I Steel
4. Hoist
5. Control Cable (Steel Wire Included)
6. Control Switch
7. Towing Trolley
8. Tow Stick
9. Flat Cable
10. Steel Trolley
11. C Track Support Bracket
12. C Coupler

Mono Rail Hoist (C Track with Flat Cable)

Special Forte: Two pieces of C clip as Support bracket mounted on I beam to avoid welding process.

Flat Cable For Swerve Power Supply System

Application:

- Swerve Power Supply System
- Explosion Proof Power Supply System
- For Span Hoist Power Supply System
- Automatic Galvanization Equipment
- Wastewater Treatment Factory
- Heavy Duty Machine Power Supply
- Movable Power Supply

Dim. 45×1.8L-100m

※Add a band will reduce the probability of cable broken.

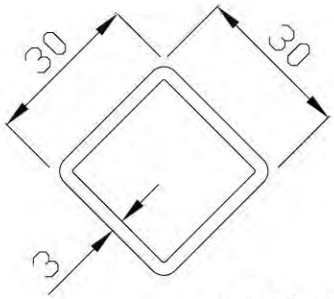

Length: 6M Each

KY-BD3060
Diamond Track
30×30×3

KY-BD3066
Diamond Track
30×30×3
(Arc Shape)
Produce
On Demand

Connect Screw:
Hexagon Screw M8×50

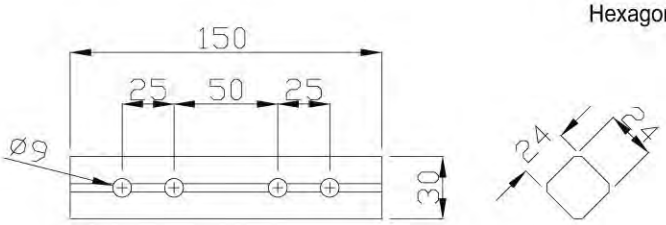

KY-BD3300
Track Coupler:
Aluminum

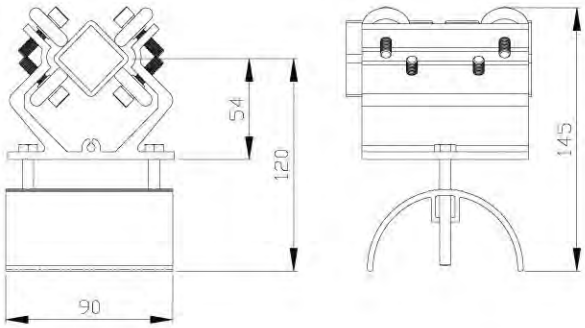

606AB Dual cam
(Galvanized Steel / Engineering Plastic available)
- Hexagon Socket Button Head Cap Screw M6×35
- Hexagon Screw M6×15
- Hexagon Screw M6×50

KY-BD3526
Diamond Track
Trolley

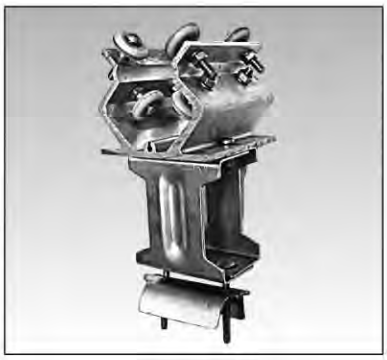

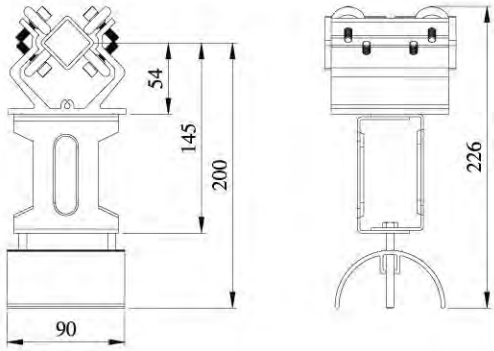

606AB Dual cam
(Galvanized Steel / Engineering Plastic available)
- Hexagon Socket Button Head Cap Screw M6×35
- Hexagon Screw M6×50

KY-BD3626
Diamond Track
Towing Trolley

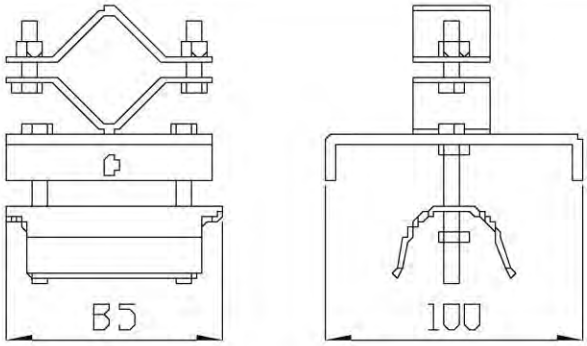

KY-BD3200
Diamond Track
End Cable Clip

※No matter how hard or easy your require is, we are serious at your business to serve the best solution. **Please contact us for related product and technical information.**

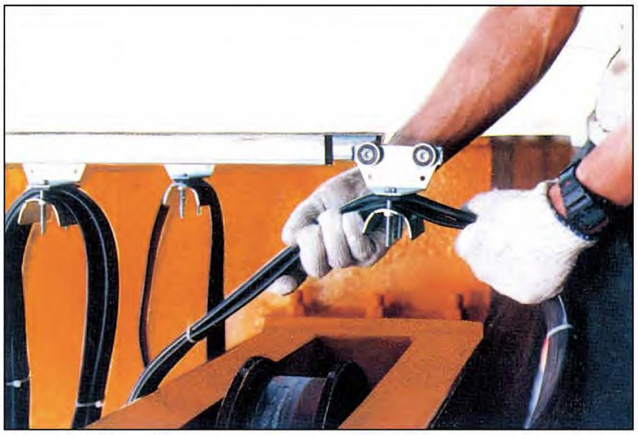

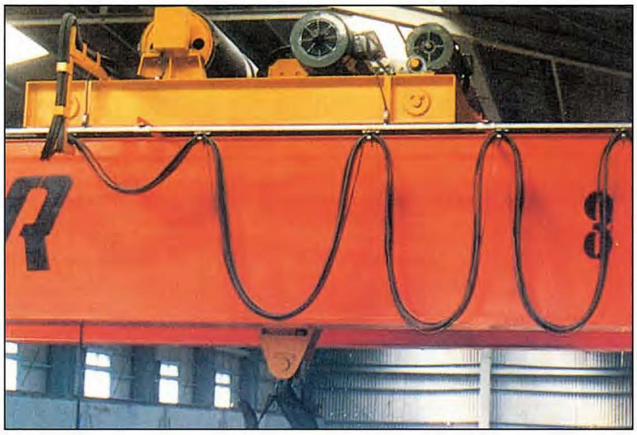

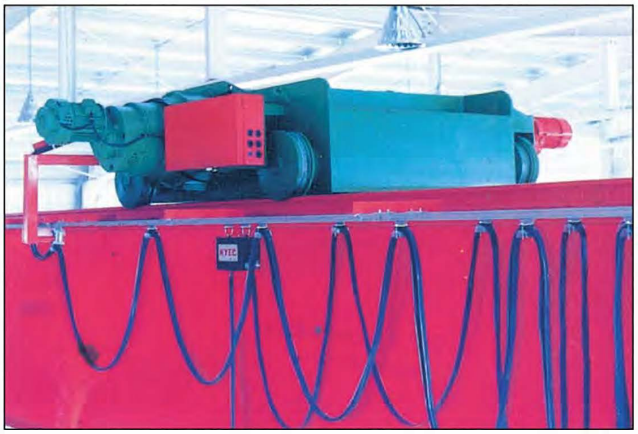

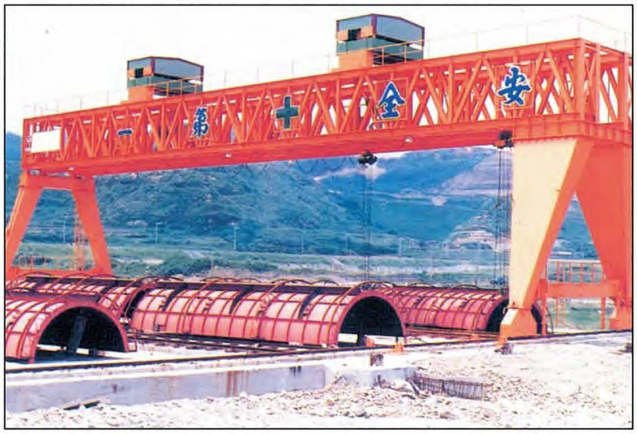

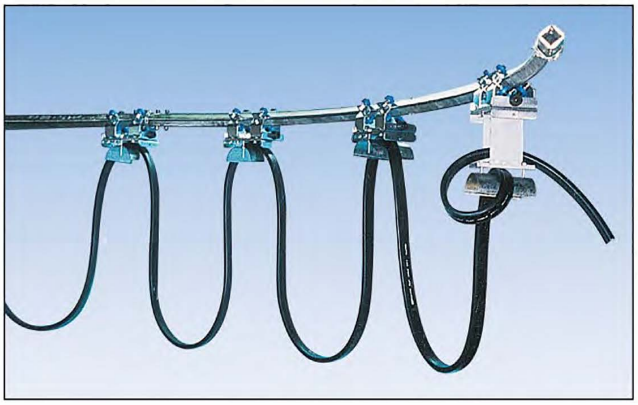

Square Trolley (For Curve)

SIAM GOLD CRANE INTERTRADE CO.,LTD
77/207 Moo 8 Tambon Na Kluea Amphoe Phra
SamutJedee Samutprakarn10290